Before Installation:

Read this instruction carefully before starting installation.
Proper tools will improve the quality of installation and reduce the time required.
If missing parts or any damage found, please take a picture and contact us.
Professional installation would be highly recommended.
Periodic check to ensure all mounting hardware remains secure and tight.

Step 1:

1. Locate (4) mounting positions each side.
2. Remove factory bolts or plugs from inner rocker panel.
3. Clean the sealant and dirt around mounting positions.

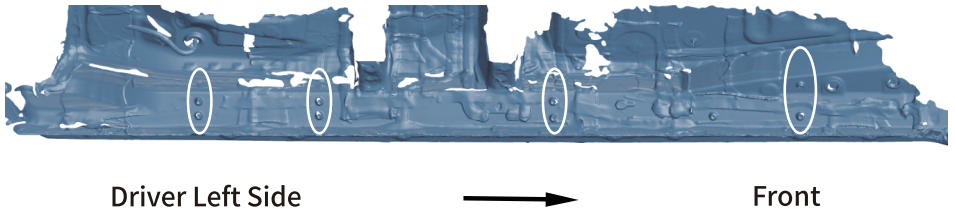

Step 2:

1. Attach bracket to inner rocker panel.
2. Secure the bracket to inner rocker panel using (2) M8 hex bolts, (2) M8 flat washers.
3. Repeat to install other brackets. Do not fully tighten.

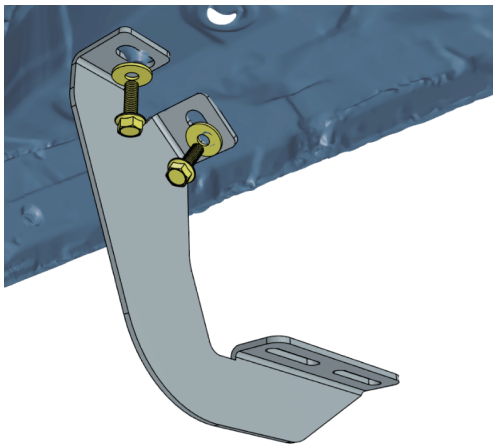

Front Driver Side Bracket

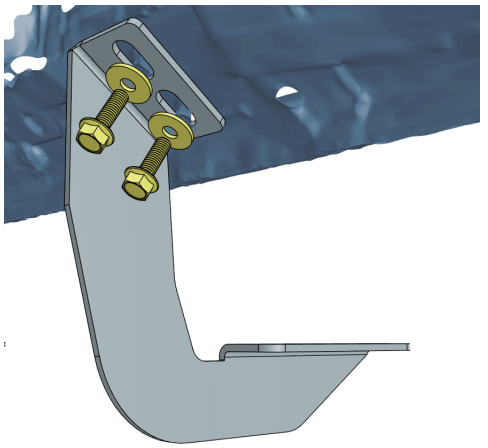

Center/Rear Driver Side Bracket

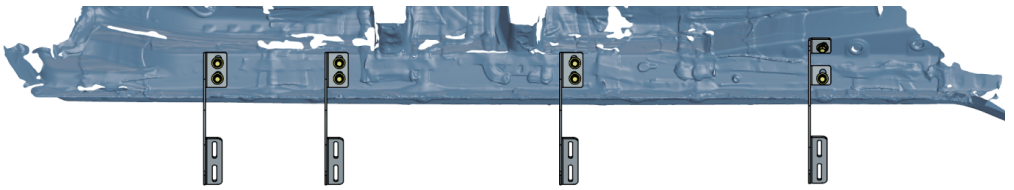

Step 3:

1. Remove (8) M8 hex bolts and (8) M8 flat washer from the step bar.
2. Slide mounting tracks to proper positions.
3. With assistance, lift and attach the step bar to brackets.
   Secure the step bar on brackets with (8) M8 hex bolts and (8) M8 flat washers.
4. Repeat to install the other side step bar, do not fully tighten.

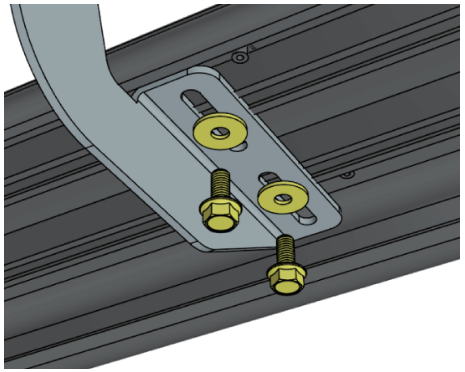

Aluminum Alloy Step Bar

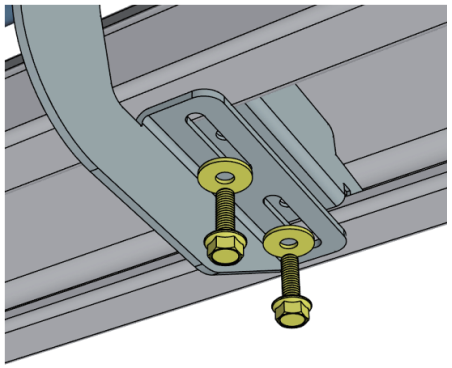

Stainless Steel Step Bar

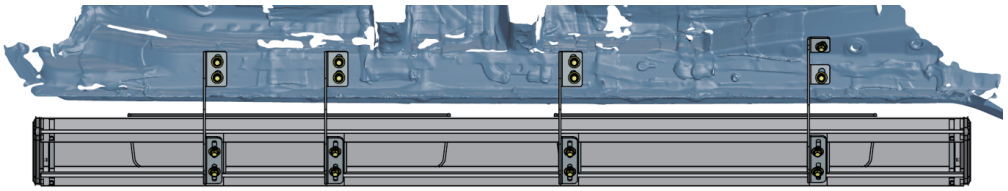

Driver Left Side → Front

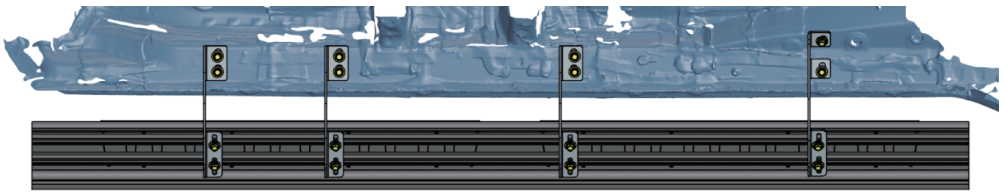

Step 4:

1. Tighten M8 hex bolts on vehicle with 15 ft-lbs. torque.
2. Adjust the step bar to level and tighten M8 hex bolts with 15 ft-lbs. torque.
3. After the step bar installed, periodic check to ensure all mounting hardware remains secure and tight.

Part List:

	Qty.	Description
①	×1	Driver Side Front Bracket
②	×3	Driver Side Center/Rear Bracket
③	×1	Passenger Side Front Bracket
④	×3	Passenger Side Center/Rear Bracket
⑤	×16	M8 Hexagon Bolt
⑥	×16	M8 Flat Washer
		Pre-installed on Step Bar
⑦	×16	M8 Hexagon Bolt
⑧	×16	M8 Flat Washer

