Tools Required
13mm, 16mm Socket
16mm Wrench
Ratchet
Torque Wrench

Before You Begin

Read instructions thoroughly before installation.
Installation sequence: Mount brackets, position step bars, then tighten all
Prep Work: Clear any paint or debris from the factory studs.
Use proper tools to ensure a correct fit and save time.
Damaged or missing parts? Please take a photo and contact us for support.
Professional installation would be highly recommended.

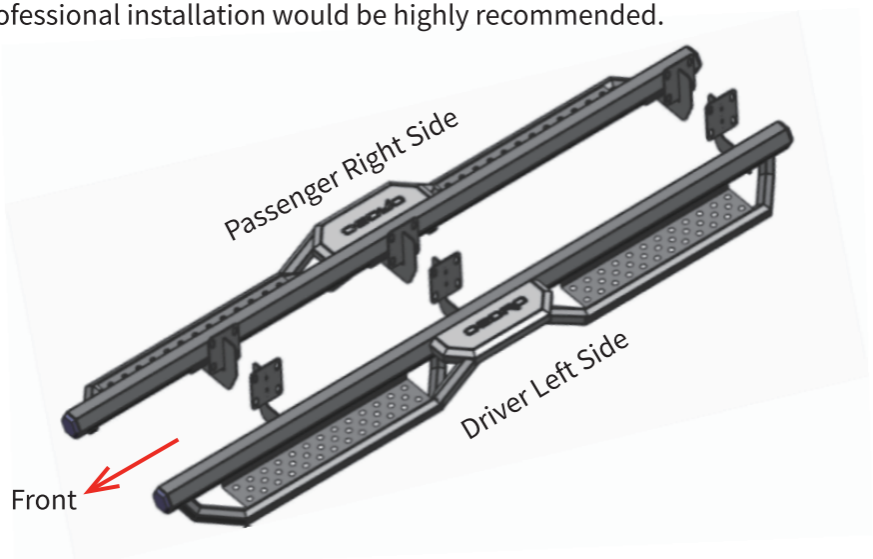

STEP 1:

1. Locate (3) mounting positions each side.
2. Remove rubber plugs on inner rocker panel.
3. Insert clip nuts onto existing holes in the inner rocker panel.
4. As shown in the figure below.

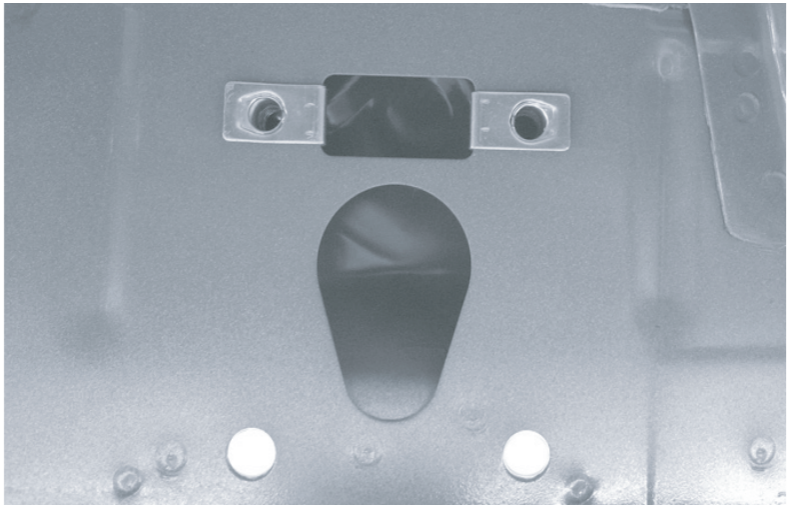

Insert M8 clip nut onto the large hole and over the smaller hole next to it, with threads inside of the inner rocker panel.

STEP 2:

1. Attach bracket to the rocker panel and secure with (4) M8 hex bolts,(6) M8 flat washers, (4) M8 lock washers, (2) M8 hex nuts.
2. Repeat to install all brackets. Do not fully tighten.

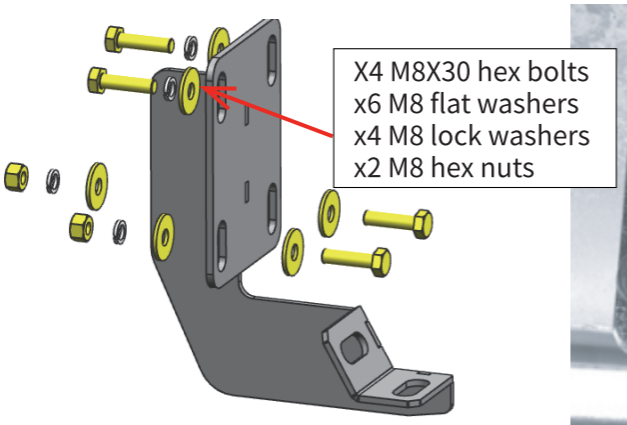

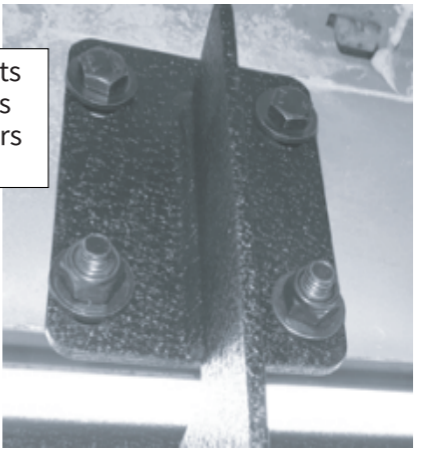

STEP 3:

1. With assistance, lift and attach the step bar to brackets. Secure the step bar on brackets using (6) M10 hex bolts, (12) M10 flat washers, (6) M10 lock Wshers.
2. Repeat to install the other side step bar.

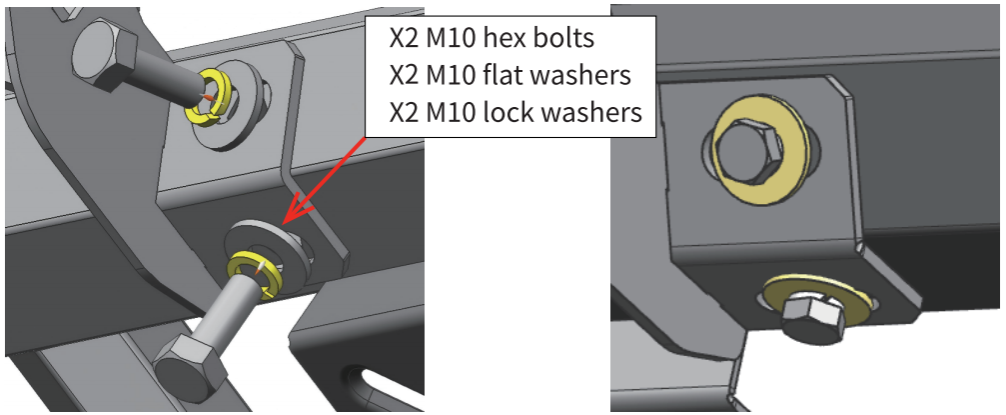

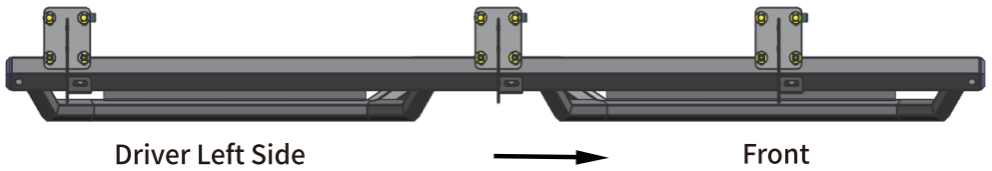

STEP 4:

1. Tighten M8 hex bolts on vehicle with 15 ft. lbs. torque.
2. Adjust the step bar to level and tighten M10 hex bolts with 30 ft. lbs. torque.
3. After the step bar installed. periodic check to ensure all mounting hardware remains secure and tight.

Part List

	Qty.	Description
①	X3	Driver Side Bracket
②	X3	Passenger Side Bracket
③	X12	M10X30 hexagonal bolt
④	X24	M8X30 hexagonal bolt
⑤	X12	M10X30 Flat Washer
⑥	X36	M8X25 Flat Washer
⑦	X12	M10 Lock Washer
⑧	X24	M8 Lock Washer
⑨	X12	M8 Hexagon nuts
⑩	X12	M8 Circlip Nuts

